| Revision NO 变更数 | Revisions 变更项 | Changed 修改者 | Date 日期 | Approved 确认者 | Date 日期 |
|---|---|---|---|---|---|
| | | | | | |
| | | | | | |

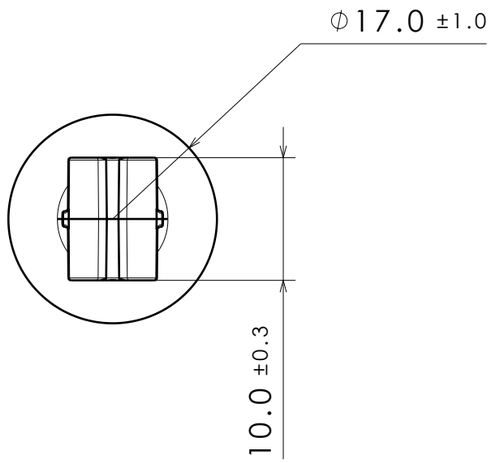


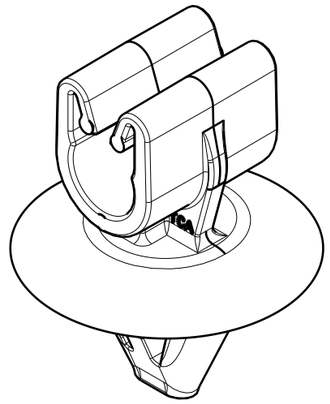

ISOMETRIC VIEW
SCALE 3:1

REFERENCE:

PERFORMANCE REQUIREMENTS AT DRY AS MOLDED:
1. PUSH IN FORCE: 45 NEWTONS (10 LBS) MAX IN THE APPLICABLE
   NOMINAL HOLE SIZE AND A PLATE THICKNESS OF 1.4mm.
2. PULL OUT FORCE: 110 NEWTONS (25 LBS) MIN IN THE APPLICABLE
   NOMINAL HOLE SIZE AND A PLATE THICKNESS OF 1.4mm.
3. SHEET METAL THICKNESS RANGE: 1.20mm - 1.60mm
4. APPLICABLE HOLE SIZE:
   A. 6.50mm +/- 0.4
   B. 6.35mm HEX +/-0.25
5. CLIP PUSH ON FORCE: 55 NEWTONS (12.5 LBS) MAX USING NOMINAL PIN SIZE OF 4.7MM

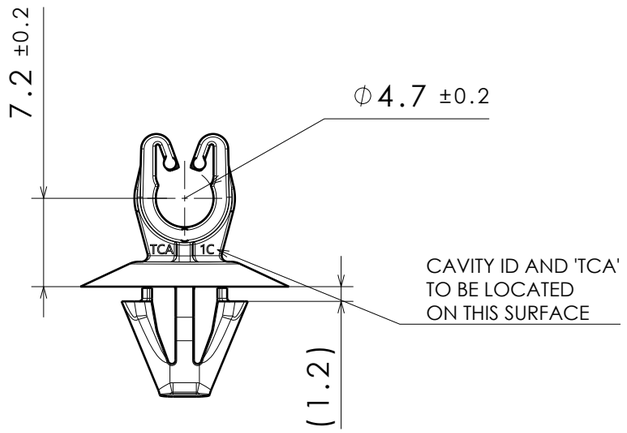


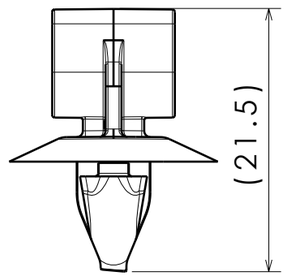


NOTES:

1. MAXIMUM PERCENT REGRIND PERMISSIBLE: 25%
2. MAX ALLOWABLE FLASH OR MISMATCH TO BE 0.3MM

| | | | | | |
|---|---|---|---|---|---|
| Material/材料: PA66HIRHS-BK | CATIA V5 | Drawn/制图 | Yancey.Yu | 2019-11-15 | Scale/比例 NO /无 |
| | | Approved/审核 | Kevin.Tang | 2019-11-15 | Title/品名 PC5AH6.5 |
| Dimension Units/尺寸单位 mm | The copyright of this drawing is reserved by HellermannTyton.it is issued on condition that it is not reproduced,copied or disclosed to a third party,either wholly or in part,without the consent of HellermannTyton. | HellermannTyton 海尔曼太通（无锡）电器配件有限公司 (WUXI) Electrical Accessories Co.,Ltd. Tel:+86-510-5282536 Fax:+86-510-5280112 | | | Drawing-No/图号 17-0126-002-CSC |
| PERFORMANCE/性能 SPECIFICATION/标准 | | | | | Format/格式 A3 |