Revision No. 变更数	Revisions 变更事项	Changed 修改者	Date 日期	Approved 确认者	Date 日期
①	Add new part	Martin.zhu	20/Nov/2014	Kevin.Tang	14.11.20
②	Add new part	Lance.Lv	27/Apr/2018	Kevin.Tang	18.04.27

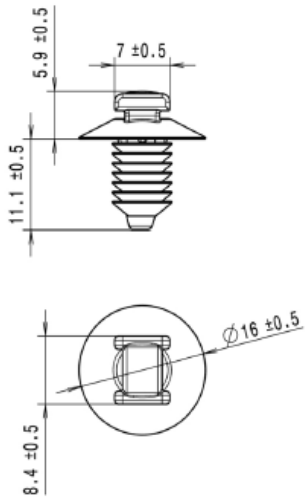

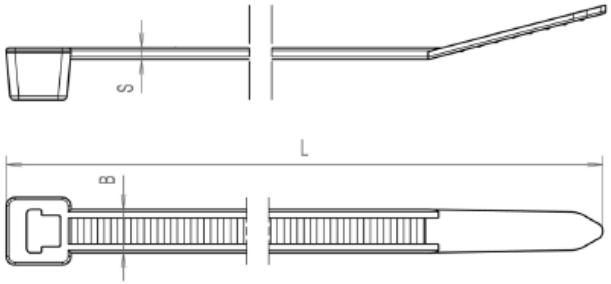

Panel thickness/适用板厚
0.6-6.0 mm

Hose size/适用孔径
Φ6.5-7.0 mm

Bundle/捆绑直径
See table

Material/材料
See table

Dimension Units 尺寸
mm

Performance/性能 Specification/规范

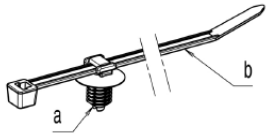

	Product type 产品名称	Material 材料	Length 长度L	Width 宽度B	Thickness 厚度S	Bundle Φ mm
②	T18RFT6LG1SD-SET	a:PA66 b:PA66	100±10	2.5±0.2	1.1±0.2	1-22
	T30RFT6LG1SD-SET	a:PA66 b:PA66	150±10	3.5±0.3	1.2±0.2	1-36
②	T50RFT6LG1SD-SET	a:PA46 b:PA46	200±10	4.6±0.2	1.2±0.2	1.5-50
①	T50RFT6LG1SD-SET	a:PA66 b:PA66	200±10	4.6±0.2	1.2±0.2	1.5-50
	T80RFT6LG1SD-SET	a:PA66 b:PA66	205±10	5.0±0.5	1.3±0.2	1.5-50

CAD

The copyright of this drawing is reserved by HELLERMANNTYTON. it is issued on condition that it is not reproduced,copied or disclosed to a third party,either wholly or in part,without the consent of HELLERMANNTYTON.

Drawn/制图	Martin	17/Nov/2014	Scale/比例	1:1
Approved/审核	Kevin	17/Nov/2014		

HellermannTyton
海尔曼太通（无锡）电器配件有限公司
(WUXI) Electrical Accessories Co.,Ltd.
Tel:+86-510-85282536
Fax:+86-510-85280112

Title/品名
Fixing tie…FT6LG1SD-SET

Drawing-No./图号
14.1906-CSC

Format 格式 A4

Page 页数 1/1