Revision NO 变更数	Revisions 变更项	Changed 修改者	Date 日期	Approved 确认者	Date 日期

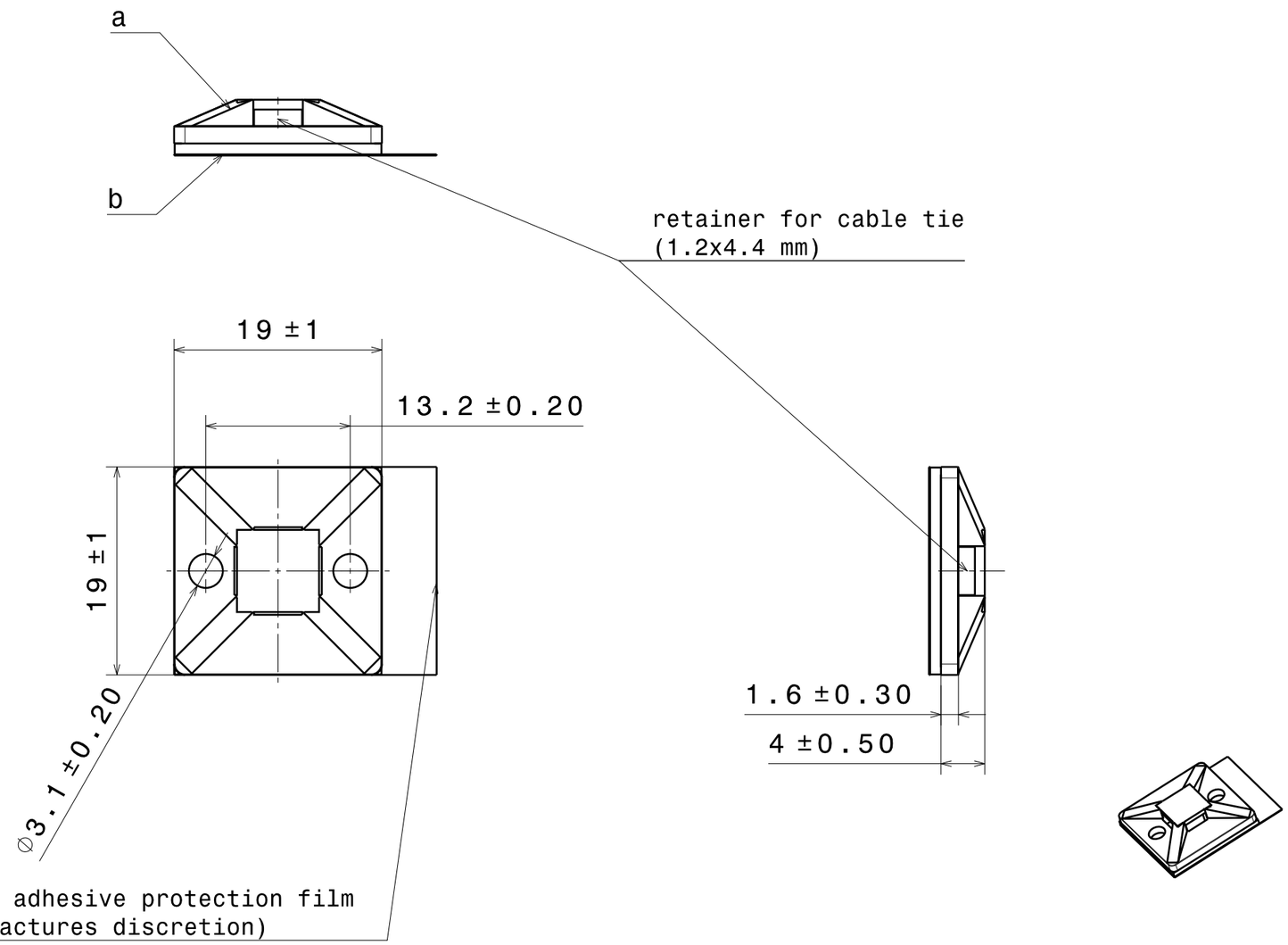

Material/材料:
a:
PA66

b:
SolidTack self adhesive pad (Acrylate PX)

Dimension Units/尺寸单位
mm

PERFORMANCE/性能
SPECIFICATION/标准

CATIA V5

Drawn/制图	Brandon Li	2018-04-02
Approved/审核	Kevin Tang	2018-04-02

Scale/比例 NO /无

Title/品名

MB3APT-A

The copyright of this drawing is reserved by HellermannTyton.it is issued on condition that it is not reproduced,copied or disclosed to a third party,either wholly or in part,without the consent of HellermannTyton.

HellermannTyton
海尔曼太通（无锡）电器配件有限公司
(WUXI) Electrical Accessories Co.,Ltd.
Tel:+86-510-5282536
Fax:+86-510-5280112

Drawing-No/图号
11-0679-003-CSC

Format/格式
A3