Revision NO 变更数	Revisions 变更项	Changed 修改者	Date 日期	Approved 确认者	Date 日期
1	Change drawing NO. from 14.2100-CSC to 05-0146-001-CSC	Lance.Lv	20181120	Kevin.Tang	20181120

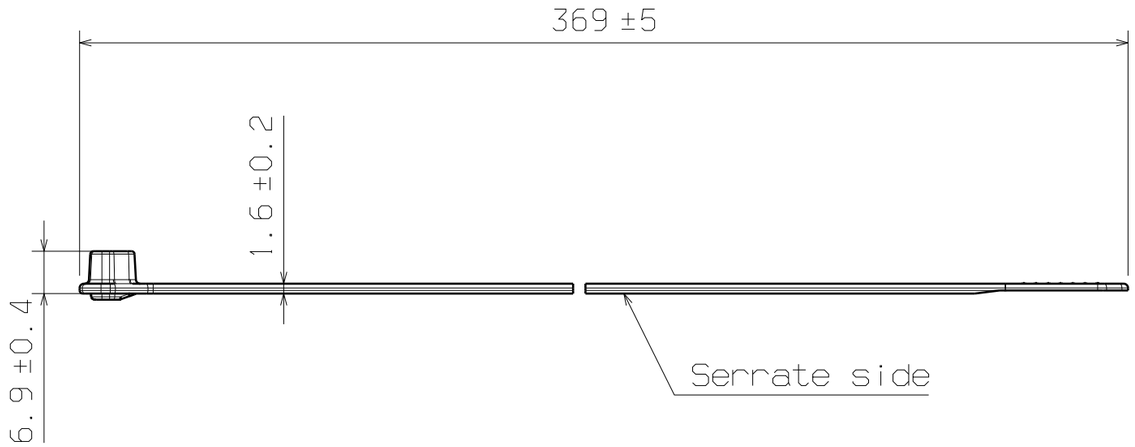

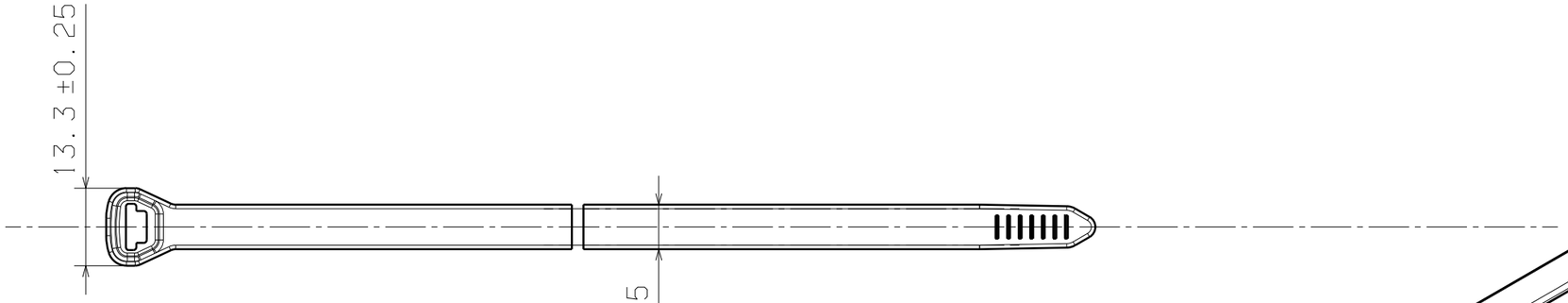

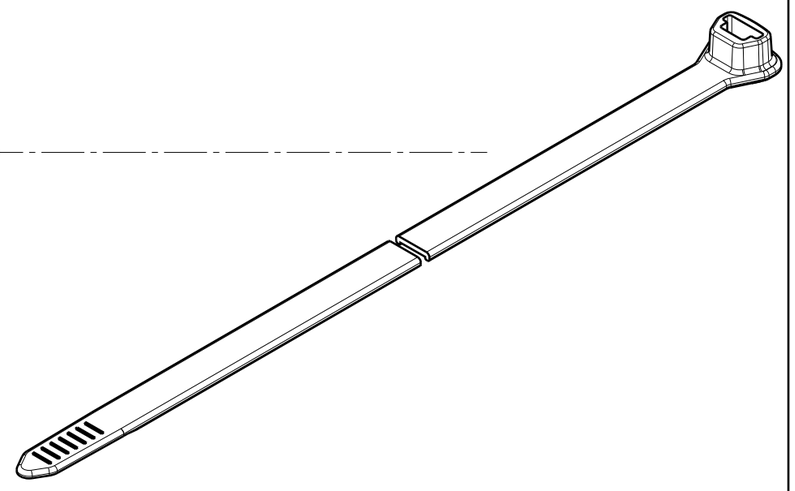

Tensile Force
环形拉断力
535N

Bundle Dia
捆绑直径
5-100mm

Color
颜色
黑色/Black

Material/材料:
PA66

Dimension Units/尺寸单位
mm

PERFORMANCE/性能
SPECIFICATION/标准

CATIA V5

Drawn/制图	Lance	2017-02-21
Approved/审核	Roger.Chang	2017-05-12

Scale/比例 NO /无

Title/品名
X120R

The copyright of this drawing is reserved by HellermannTyton.it is issued on condition that it is not reproduced,copied or disclosed to a third party,either wholly or in part,without the consent of HellermannTyton.

HellermannTyton
海尔曼太通（无锡）电器配件有限公司
(WUXI) Electrical Accessories Co.,Ltd.
Tel:+86-510-5282536
Fax:+86-510-5280112

Drawing-No/图号
05-0146-001-CSC
1

Format/格式
A3