Revision Level		Revision Record	Changed	Date	Approval	Date
Part	Drawing					
	1	Updated pictogram and drawing template.	SIMON NG	16-Oct-19	Edward Tan	16-Oct-19
	1:1	Added HT Global project Number.	SIMON NG	16-Oct-19	Edward Tan	16-Oct-19

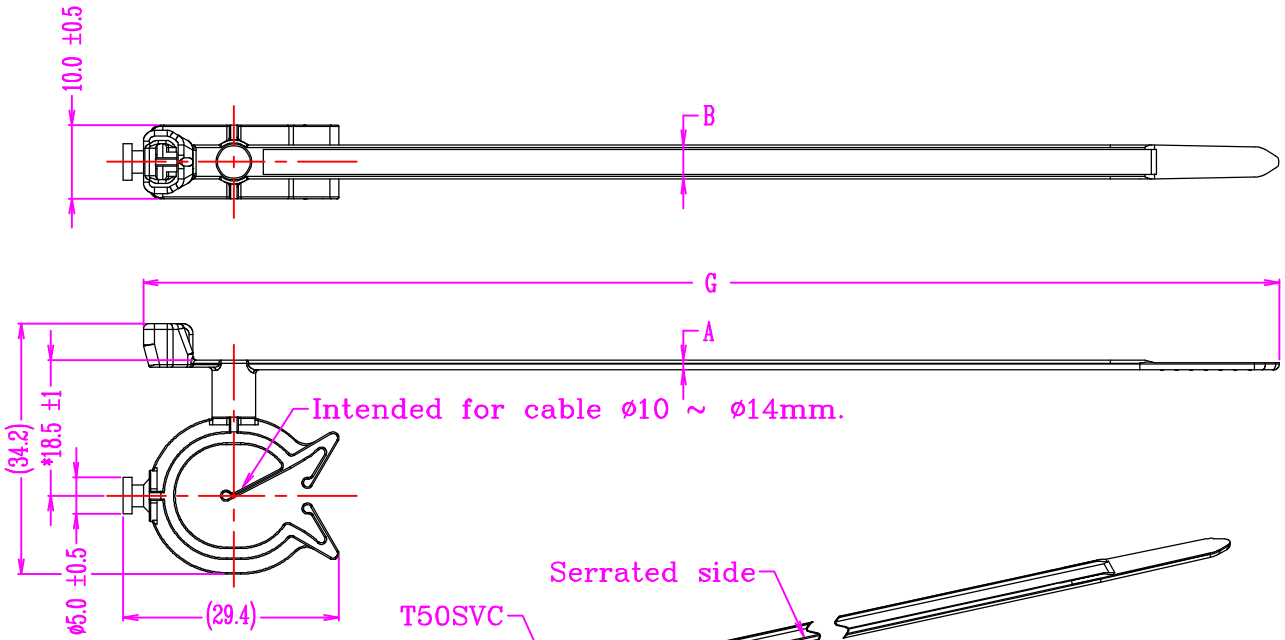

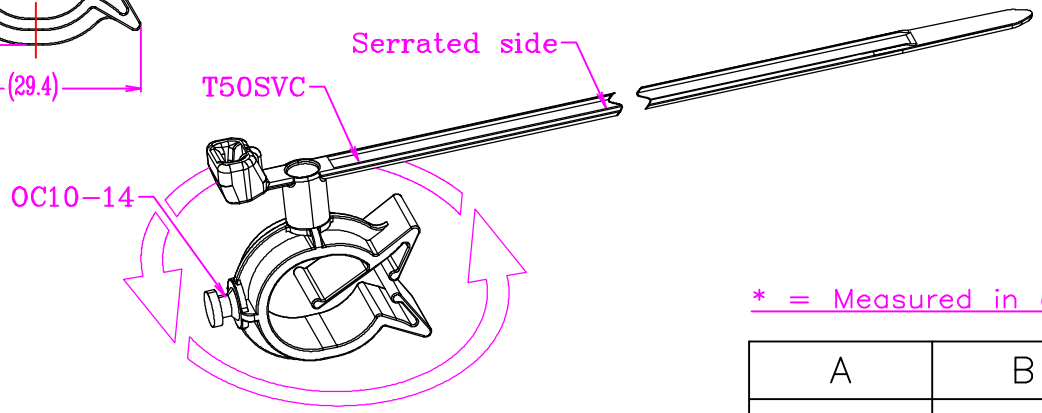

Clip 360° Rotatable

* = Measured in orientated condition

A	B	G
1.35 ±0.2	4.7 ±0.2	155 ±10

Bundle ø Max

ø2 ~ ø35mm

Material

P.A. 66

Tensile strength

222N (Minimum)

PERFORMANCE SPECIFICATION

ACAD

The copyright of this drawing is reserved by HELLERMANNTYTON.
It is issued on condition that it is not reproduced, copied or disclosed to a third party, either wholly or in part, without the consent of HELLERMANNTYTON.

Drawn	Simon Ng	08 Aug 2014
Approved.	EDWARD TAN	08 Aug 2014

HellermannTyton
545, Yishun Industrial Park A
Yishun Avenue 7
Singapore 768741
Tel: (+65) 6852 8585
Fax: (+65) 6756 6798

Scale: 1 : 1

Reference: 14.1889

Title

T50SVCOC10-14

Uncontrolled Document

Drawing-No [SG14054-01]

05-0044-004-CSH 1:1

Format A4

Sheet 1 of 1