Revision NO 变更数	Revisions 变更项	Changed 修改者	Date 日期	Approved 确认者	Date 日期
1	Change Drawing No. (Original:QDQ3004-C1A-00-CSC) Add Material	Billy.Zhu	190813	Kevin.Tang	190813

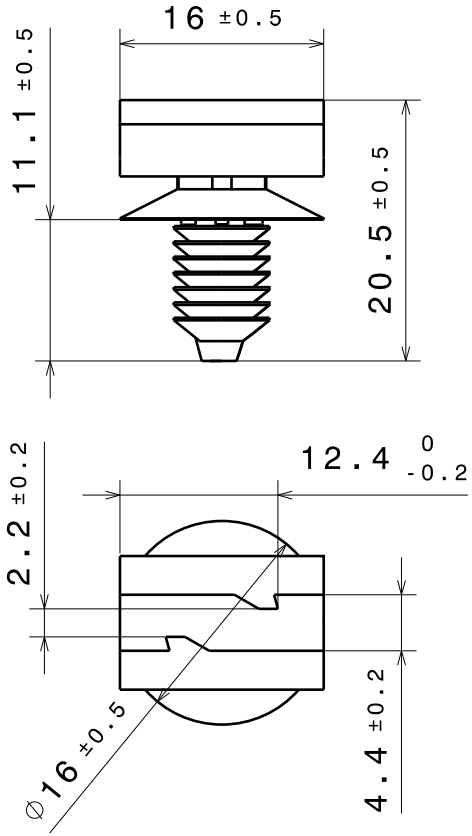

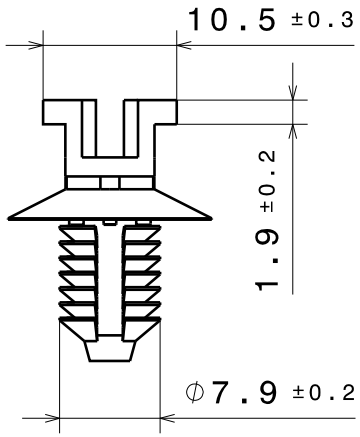

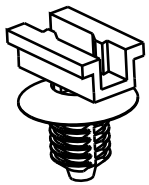

Isometric view
Scale: 1:1

Panel Thickness 适用板厚
0.7-6mm
Hole Size 捆绑直径
Ø 6.5-7mm
Material 材料
See table
Dimension Units 尺寸单位mm
PERFORMANCE 性能 SPECIFICATION 标准

	Title/品名	Colour/颜色	Material/材料
	FT6LG AMP	BK	PA66
1	FT6LG AMP	GY	PA46

CATIA V5

Drawn/制图	Billy.Zhu	2019-08-12
Approved/审核	Kevin.Tang	2019-08-12

Scale/比例 2:1

Title/品名

FT6LG AMP

The copyright of this drawing is reserved by HellermannTyton.
it is issued on condition that it is not reproduced,copied or disclosed to a third party,either wholly or in part, without the consent of HellermannTyton.

HellermannTyton
海尔曼太通（无锡）电器配件有限公司
(WUXI) Electrical Accessories Co.,Ltd.
Tel:+86-510-5282536
Fax:+86-510-5280112

Drawing-No/图号

1 00-0038-001-CSC

Format/格式 A4